DaVinci Custom Fireplace™

STYLE: TIMBERFYRE SEE THRU 48" x 30"

Electrical Req'd - 7A 120V Gas Req'd - 130,000 BTU's
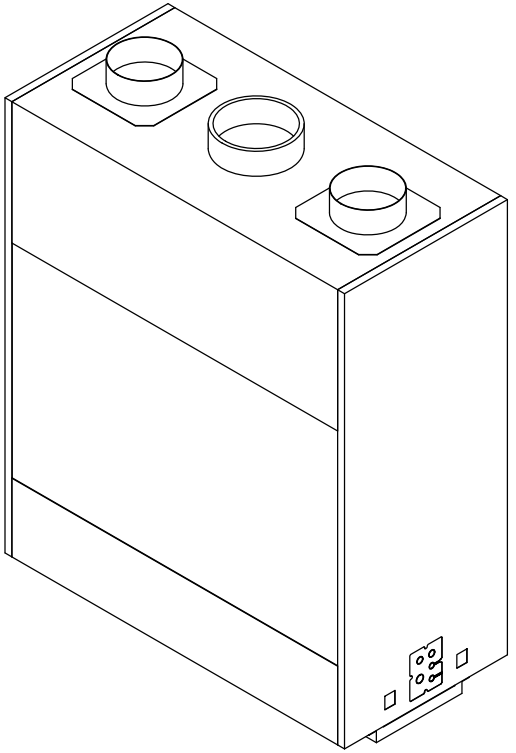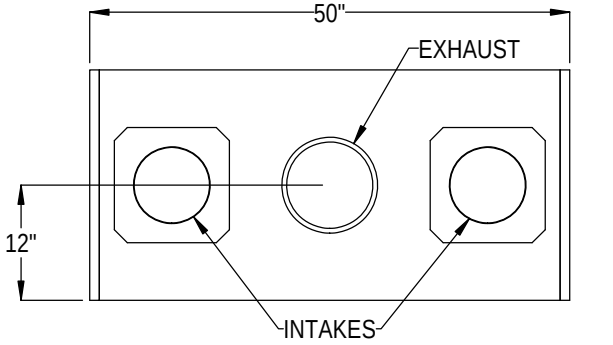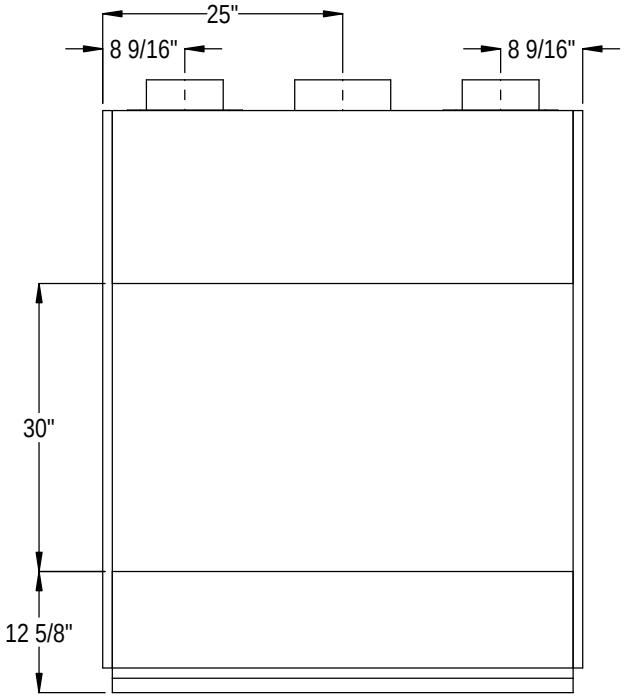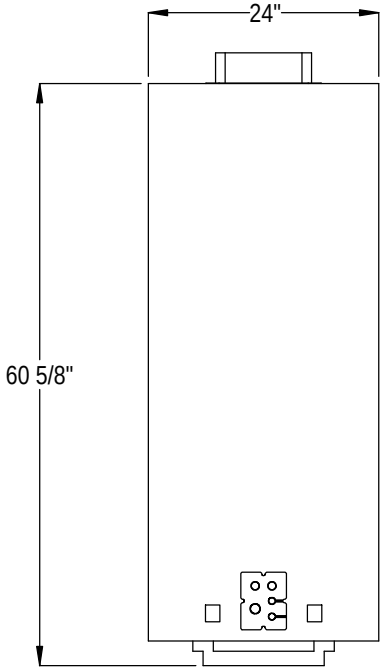
NG - Min = 5.5"wc (1.37kpa), Max = 7"wc (1.74 kpa)
LP - Min = 11"wc (2.74 kpa), Max = 13"wc (3.23 kpa)